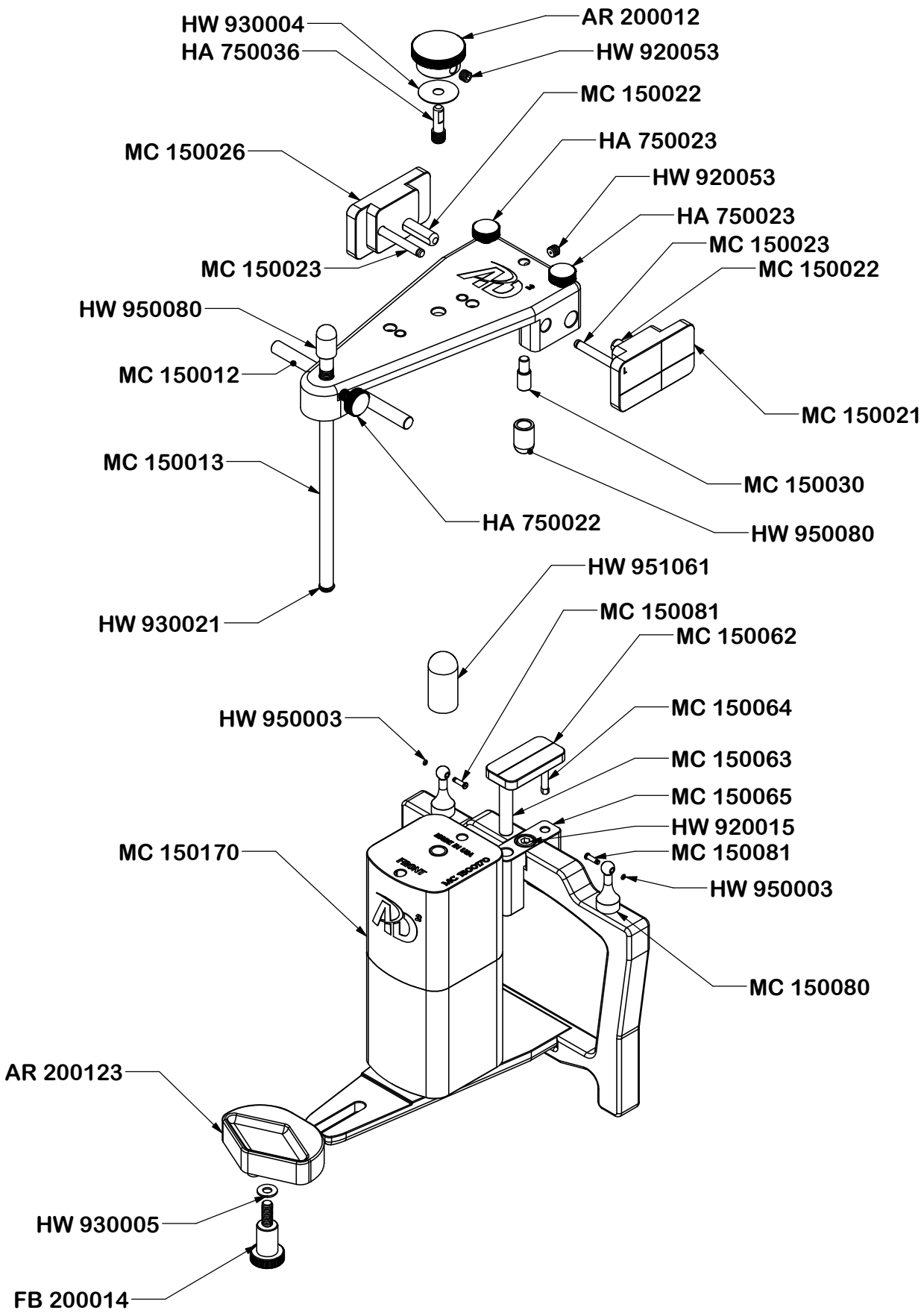

Advanced Dental Designs, Inc.	TITLE: **M.C.D. SYSTEM**	DWG NO. **MC 100010**